Accuride 9308 drawer runners, full extension with lock-out facility

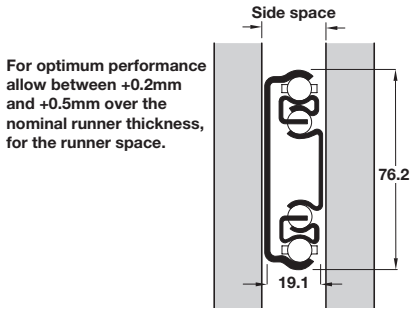

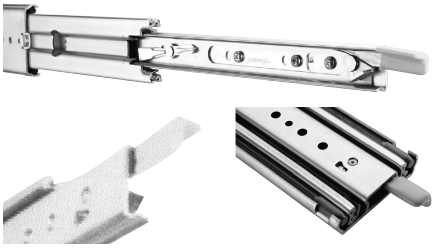

Front lever lock release

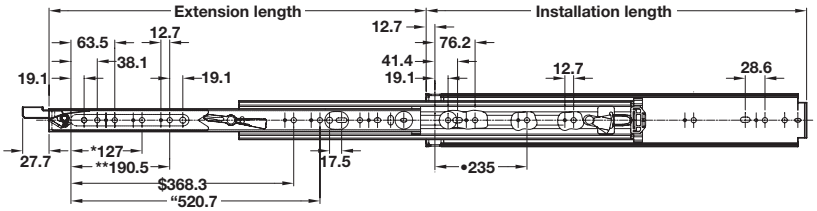

*Lengths 457.2 and above
**Lengths 558.8 and above
$Lengths 914.4 and above
"Lengths 864.6, 914, 1219.2 and 1524 only
*Lengths 762 and above

Mounting brackets available shown on page **206**

- Can be side mounted or base and top mounted using brackets
- Ideal for heavy duty tool boxes, battery trays and mobile applications
- Load carrying capacity up to 227 kg (see below for individual runner capacity)
- Not for flat mounting
- Lock in and out facility
- Front lever lock release
- Bright zinc-plated steel
- Order fixing screws separately (max. head height 4.8 mm, Ø 12.7 mm)
- Order qty: 1 pc

Full Extension | TESTED 10,000 CYCLES | FIXINGS REQUIRED HOSPA Ø 4.0 | FIXINGS REQUIRED HOSPA Ø 5.0

Installed/Extension length	Load capacity	Left hand	Right hand
304.8 mm	227 kg	422.33.832	422.33.833
355.6 mm	227 kg	422.33.837	422.33.838
406.4 mm	227 kg	422.33.842	422.33.843
457.2 mm	227 kg	422.33.847	422.33.848
508 mm	227 kg	422.33.852	422.33.853
558.8 mm	227 kg	422.33.857	422.33.858
609.6 mm	227 kg	422.33.862	422.33.863
660.4 mm	227 kg	422.33.867	422.33.868
711.2 mm	227 kg	422.33.872	422.33.873
762 mm	222 kg	422.33.877	422.33.878
812.8 mm	218 kg	422.33.882	422.33.883
863.6 mm	213 kg	422.33.887	422.33.888
914.4 mm	209 kg	422.33.892	422.33.893
1016 mm	200 kg	422.33.912	422.33.913
1066.8 mm	195 kg	422.33.917	422.33.918
1219.2 mm	182 kg	422.33.922	422.33.923
1371.6 mm	168 kg	422.33.930	422.33.931
1524 mm	154 kg	422.33.952	422.33.953

Load ratings vary according to runner length. Load rating shown are the maximum for a pair of 450 mm length slide mounted runners installed 450 mm apart. For larger drawers a test installation is advised. Please contact us for further information if required

DRAWER SYSTEMS, STAYS AND HINGES 2015, © Häfele U.K. Ltd 2015. Dimensional data not binding. We reserve the right to alter specifications without notice.

Accuride 9308 drawer runners, full extension with lock-out facility

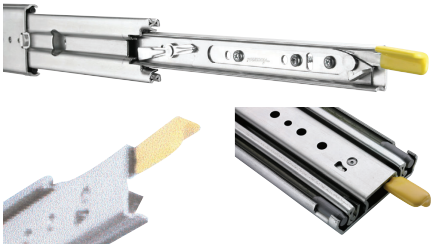

Front lever lock release

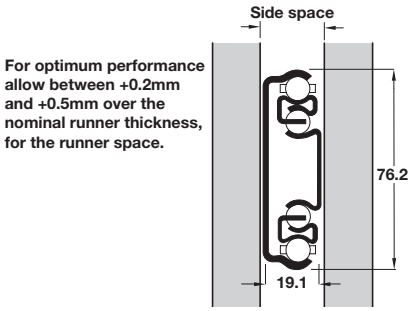

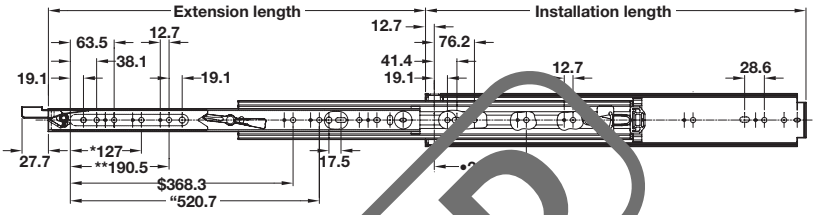

*Lengths 457.2 and above
**Lengths 558.8 and above
$Lengths 914.4 and above
"Lengths 864.6, 914, 1219.2 and 1524
*Lengths 762 and above

Mounting brackets available shown on page **206**

SUPERSEDED

- Can be side mounted or base and top mounted using brackets
- Ideal for heavy duty tool boxes, battery trays and mobile applications
- Load carrying capacity up to 227 kg (see below for individual runner capacity)
- Not for flat mounting
- Lock in and out facility
- Front lever lock release
- Bright zinc-plated steel
- Order fixing screws separately (max. head height 4 mm, Ø 12.7 mm)
- Order qty: 1 pc

Full Extension | TESTED 10,000 CYCLES | FIXINGS REQUIRED HOSPA Ø 4.0 | FIXINGS REQUIRED HOSPA Ø 5.0

Installed/Extension length	Load capacity	Left hand	Right hand
304.8 mm	227 kg	422.33.832	422.33.833
355.6 mm	227 kg	422.33.837	422.33.838
406.4 mm	227 kg	422.33.842	422.33.843
457.2 mm	227 kg	422.33.847	422.33.848
508 mm	227 kg	422.33.852	422.33.853
558.8 mm	227 kg	422.33.857	422.33.858
609.6 mm	227 kg	422.33.862	422.33.863
660.4 mm	227 kg	422.33.867	422.33.868
711.2 mm	227 kg	422.33.872	422.33.873
762 mm	222 kg	422.33.877	422.33.878
812.8 mm	218 kg	422.33.882	422.33.883
863.6 mm	213 kg	422.33.887	422.33.888
914.4 mm	209 kg	422.33.892	422.33.893
1016 mm	200 kg	422.33.912	422.33.913
1066.8 mm	195 kg	422.33.917	422.33.918
1219.2 mm	182 kg	422.33.922	422.33.923
1524 mm	154 kg	422.33.952	422.33.953

Load ratings vary according to runner length. Load rating shown are the maximum for a pair of 450 mm length slide mounted runners installed 450 mm apart. For larger drawers a test installation is advised. Please contact us for further information if required

DRAWER SYSTEMS, STAYS AND HINGES 2015, © Häfele U.K. Ltd 2015. Dimensional data not binding. We reserve the right to alter specifications without notice.