Laundry basket, angled

- Designed higher at the front than the back so it fits into a cabinet with the door front hinged at the base instead of the side
- Basket height x depth: 420 x 271 mm
- Suitable for 300 or 450 mm wide cabinets
- With lowered handle spaces
- Front fixing for hanging on mounting rail
- Chrome plated steel wire
- Order qty: 1 pc

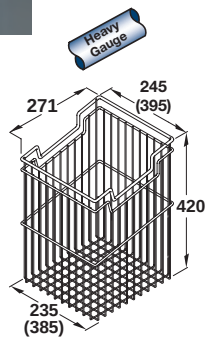

YOU ALSO NEED:

MOUNTING RAIL Page 73
FLAP STAY Page 73
CATCH Page 73

For cabinet width	Basket width	Capacity	Cat. No.
300 mm	235/245 mm	23.5 litres	540.49.231
450 mm	385/395 mm	39.0 litres	540.49.233

Laundry basket, straight

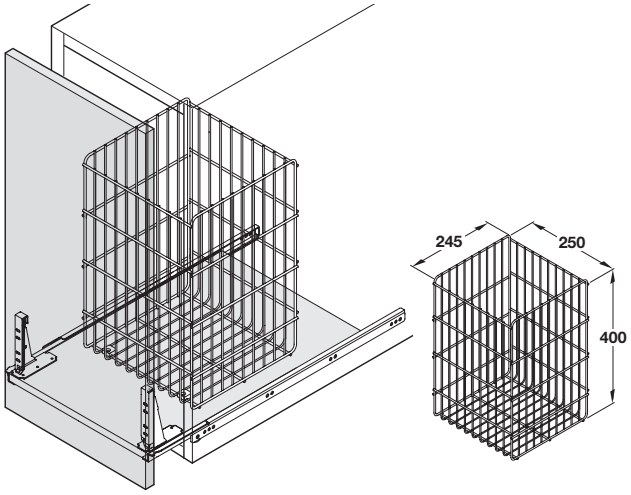

- Can be mounted onto a shelf base using fastening blocks or to tilting door front flap using mounting rail, flap hinge and catch
- Height x width x depth: 400 x 250 x 245 mm
- Suitable for min. 300 mm wide cabinets
- Polished chrome plated steel wire
- For runners for use with shelf based version visit www.hafele.co.uk
- Order qty: 1 pc

YOU ALSO NEED:

MOUNTING RAIL Page 73
FLAP STAY Page 73
CATCH OR FASTENING BLOCK Page 73

For cabinet width	Cat. No.
Min. 300 mm	540.11.219

DESIGN 2016, © Häfele U.K. Ltd 2016. Dimensional data not binding. We reserve the right to alter specifications without notice.