Strap hinge, grade 316 stainless steel

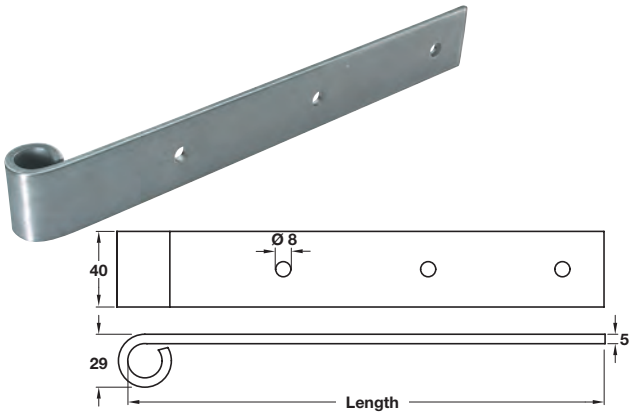

- To take Ø 16 mm pin
- Grade 316 stainless steel, brushed finish
- Order hinge pin separately, shown below
- Order fixing bolts separately
- Order qty: 1 pc

M6 FIXINGS REQUIRED

Length	Cat. No.
300 mm	926.87.060
500 mm	926.87.070
700 mm	926.87.080

Hinge pin, grade 316 stainless steel

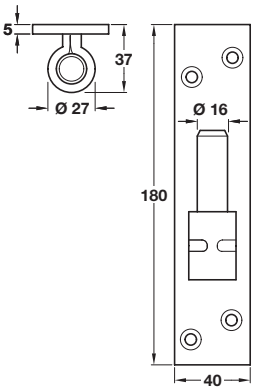

- Vertical plate
- Ø 16 mm brass pin
- To suit strap hinge shown above
- Grade 316 stainless steel with brass pin
- Order fixing screws separately
- Order qty: 1 pc

FIXINGS REQUIRED HOSPA Ø 5.5

Finish	Cat. No.
Brushed stainless steel	926.87.020

Hinge pin, grade 316 stainless steel

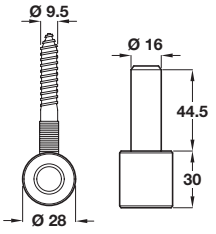

- Screw in
- Ø 16 mm brass pin
- To suit strap hinge shown above
- Grade 316 stainless steel with brass pin
- Order qty: 1 pc

Finish	Cat. No.
Brushed stainless steel	926.87.022

Tee hinge, grade 316 stainless steel

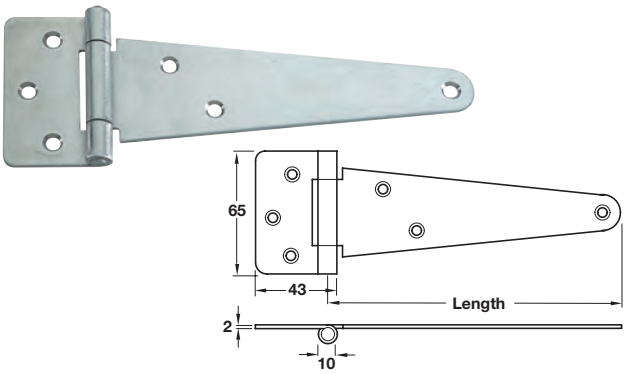

- Ø 6 mm stainless steel pin
- Grade 316 stainless steel, brushed finish
- Order fixing screws separately
- Order qty: 1 pc

FIXINGS REQUIRED HOSPA Ø 5.5

Length	Cat. No.
150 mm	926.87.030
200 mm	926.87.040
250 mm	926.87.045
300 mm	926.87.050

These fittings are manufactured from grade 316 stainless steel. They are suitable for use in external situations, damp environments and clean areas and are particularly suited to costal locations where mild steel fittings would be prone to corrosion

Most of the products you will find in this catalogue are available within 24 hours. However, to be able to offer the breadth of range in our collection, a small number of products have a longer lead time that is typically around 14 days. Please call 0800 171 2909 for an accurate delivery date when you see this symbol.

TCH AH 2019, © Häfele U.K. Ltd 2019. Dimensional data not binding. We reserve the right to alter specifications without notice.